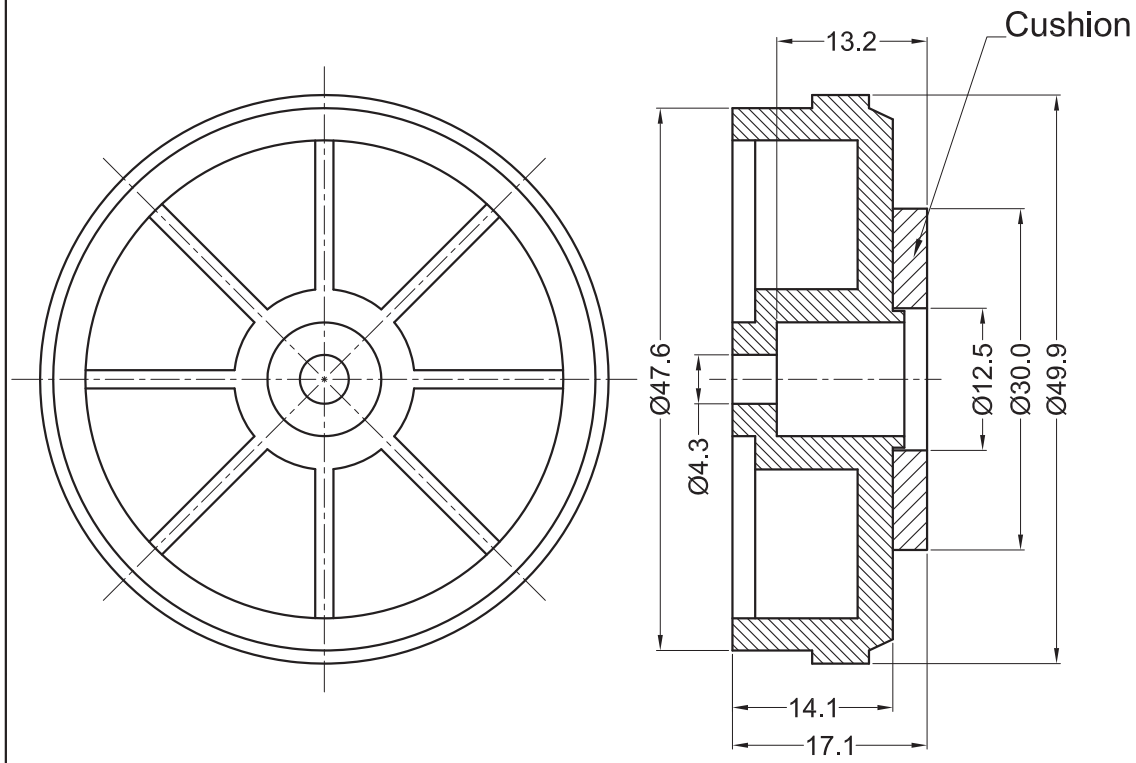

Fig.1

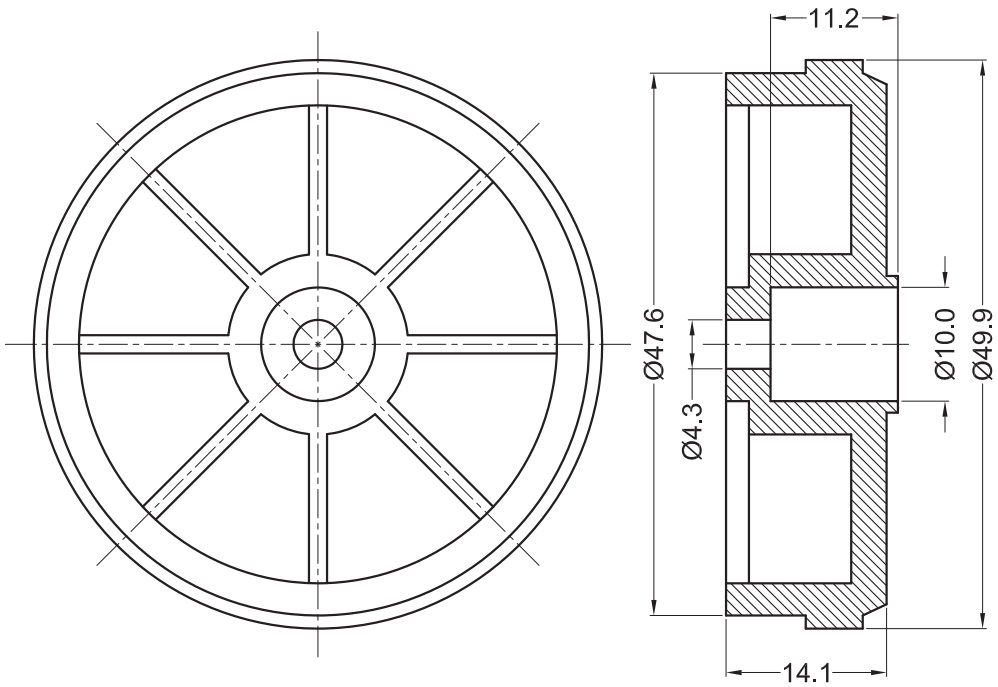

Fig.2

Part No.	Article No.	Cushion Material	Cushion Size	Finish	Fig.
30100	GFF-5014	EVA Tape	3.0T*30.0*12.5	/	1
30101	GFF-5014-G	EVA Tape	3.0T*30.0*12.5	Gold Plated	
30102	GFF-5014BB-G	/	/		2
30195	GFF-5014-SW	EVA Tape	3.0T*30.0*12.5	Silver-White Plated	1

Notes:

1.Foot Material: ABS UL94 HB;
2.Color: Black;
3.RoHS Compliant;

Americom GmbH https://americom.de						DATE	2019-10-23	DIMENSION	TOLERANCE
TITLE	ABS FOOT					SCALE	FIT	L≦4	±0.10
ARTICLE NO.	GFF-5014	MOLD NO.	S0151	DRAW	JF	UNIT	MM	4＜L≦15	±0.20
PART NO.	SEE TABLE	MATERIAL	SEE NOTES	DESIGN	JF	VERSION	A0	15＜L≦50	±0.30
DWG NO.	E3026	COLOR	SEE NOTES	APPROVAL	FDL	VIEW		50＜L≦100	±0.40